Traction Power Wayside Energy Storage and Recovery Technology
A Broad Review

Presentation to IEEE VTS Philadelphia Chapter

February 25th, 2022

Rail Vehicle Regenerative Braking Overview

- How it works…
  - Power is generated (“regenerated”) by the motors when a train is braking
  - Some of the regenerated power is used to brake the train and to power train auxiliaries (lights, HVAC, control systems, etc.)
  - The propulsion control system allows the braking train’s voltage to rise up to 120% of nominal (typ.) so the excess power can “reach” other trains
  - If other trains are not close enough or they cannot consume the excess power, it gets dissipated in resistor banks on the train that is braking
  - Conventional substation diode rectifiers do not permit reverse power flow from the traction power system to the utility, which “traps” the excess regenerated power in the dc power system

LRV Regenerative Braking Overview

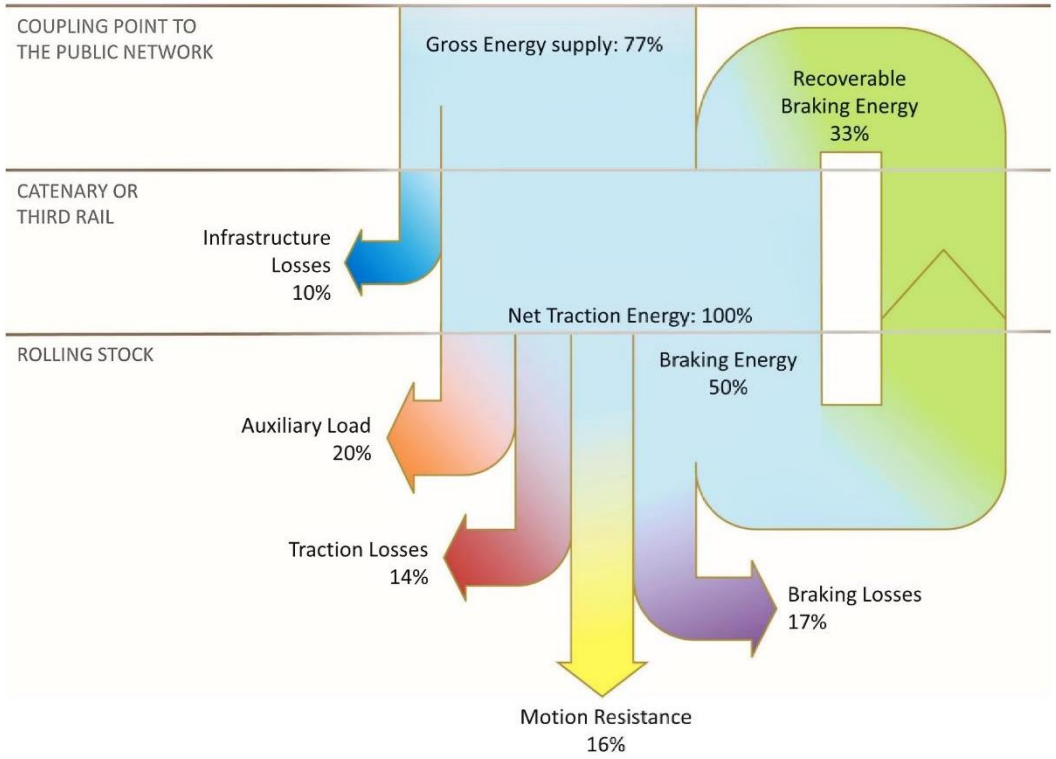

Figure 1. Typical traction energy flow in urban rail systems [1].

- A significant portion of the excess energy available from regenerative braking is not utilized (15-30% annual average is commonly cited)
- Figure 1 is taken from 2014 International Journal of Railway Research paper ("The amalgamation of measured and estimated consumption data for different urban rail systems within Europe"). Noted as illustrative only, due to "significant variation between different systems".

LRV Regenerative Braking Overview

- We want to maximize system "receptivity": recovered energy/available energy
- Many variables influence excess energy utilization
  - Rail system design (substation & station/stop locations, speeds, track gradients)
  - Train headways (spacing) and relative locations of trains on opposite tracks
  - % of trains that are equipped with regenerative braking
  - Regenerative braking system capability and voltage regulation settings
- The purpose of wayside energy storage systems (WESS) is to recover as much of the excess energy as possible and release it *when needed*
  - For use by other trains (energy conservation = reduction of utility energy costs)
  - To reduce substation average power demand (reduction of utility demand costs)
  - To provide voltage support ("boost") to trains
  - To move trains to nearest stations during power supply outages

Overview of Available Technologies

- Available Wayside Energy Storage Technologies
  - Flywheels
  - Supercapacitors
  - Batteries
- Available Wayside Energy Recovery Technologies
  - Reversible Substations

Flywheel Energy Storage

- Motor-driven, high-speed rotating mass contained in a vacuum
  - Up to 16,000 rpm (Beacon Power)
  - 10,000 to 20,000 rpm (VYCON)
  - Up to 45,000 rpm (Stornetic)
  - Kinetic energy = 1/2 x mass x (speed)^2
  - Magnetic bearings for rotor
- Accelerated by regenerated power
- Generates power when motor connections are reversed

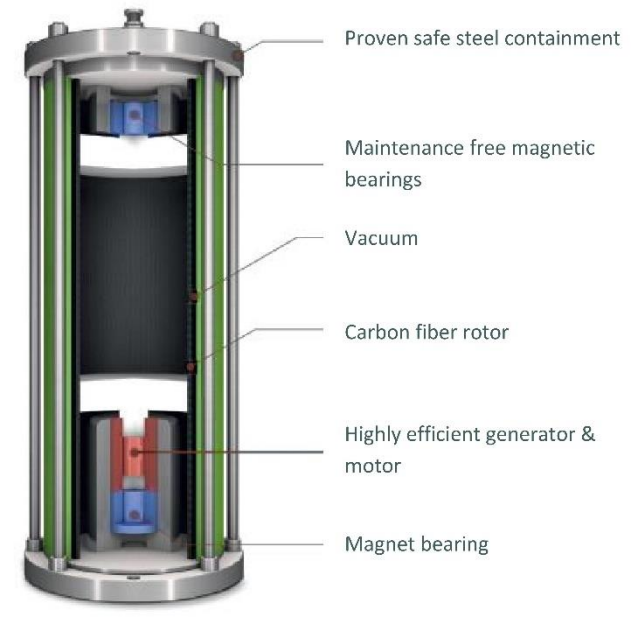

Flywheel Energy Storage

- Salient Information
  - High energy density (energy stored per unit weight or volume)
  - Very high cycling capacity, long life, minimal maintenance
  - No power/energy capacity reduction over time
  - Operates over a very wide temperature range (performance is independent of temperature)
  - Fast response (charging and discharging)
  - Environmentally benign (including salvage)
  - Relatively heavy & needs very stable foundation
  - Intended for high-power, short-discharge applications (15 seconds to 5 minutes, typ.)

Supercapacitor Energy Storage

- Supercapacitors (Ultracapacitors, **E**lectrical **D**ouble **L**ayer **C**apacitors)
  - Relatively low energy density (energy stored per unit weight or volume)
  - Charge/discharge exceptionally quickly
  - Performance is ≈ independent of op. temperature (-40 to +65 C)
  - Complete discharge is possible without damage or reduction in lifetime
  - Long lifetime, practically independent of # of charge/recharge cycles (the very thin capacitor insulation degrades with time)
  - Low weight
  - Low energy density limits their applications to short-time power injections (seconds)

Supercapacitor Energy Storage

DATASHEET 51V MODULE

DuraBlue™
Advanced Shock & Vibration Technology

FEATURES AND BENEFITS*

- Up to 1,000,000 duty cycles or 10 year DC life
- 51V DC working voltage
- Active cell balancing
- Temperature output
- Overvoltage outputs available
- High power density
- Extreme Vibration Environment Compatible

TYPICAL APPLICATIONS

- Hybrid vehicles
- Rail
- Heavy industrial equipment
- UPS systems

PRODUCT SPECIFICATIONS

ELECTRICAL	BMOD0189 P051 B2A
Rated Capacitance[1]	189 F
Minimum Capacitance, initial[1]	189 F
Maximum Capacitance, initial[1]	200 F
Maximum ESR_{DC} initial[1]	5.6 mΩ
Test Current for Capacitance and ESR_{DC}[1]	100 A
Rated Voltage	51 V
Stored Energy[3]	69 Wh
Absolute Maximum Voltage[2]	54 V
Over Voltage (OV) Alarm "ON" Range[4]	51.3 - 54.3 V
Nominal Module Balance "ON" Voltage	45.0 V
Absolute Maximum Current	1,900 A
Maximum Series Voltage	750 V
Capacitance of Individual Cells[7]	3,400 F
Stored Energy, Individual Cell[7]	3.8 Wh
Number of Cells	18
TEMPERATURE	
Operating Temperature (Cell Case Temperature)	
Minimum	-40°C
Maximum	65°C

- "Strings" are composed of individual capacitors (2.5-3 V) in modules connected in series as needed to achieve desired output voltage
- Strings are combined in parallel to obtain the desired output current
- Equalizing circuits are required to balance the capacitor voltages during charging
- Maxwell (now owned by Tesla) is the primary manufacturer for railway applications

Battery Energy Storage

- Some History…
  - First battery systems used lead acid batteries (low-cost, high-capacity)
  - Lead acid batteries provide high power density and long-duration output (hours)
  - Lead acid batteries can be charged from the system (“trickle charged”) during off-peak periods to be available during peak periods
  - They have a limited number of charge/recharge cycles compared to more recent battery technologies
  - They charge too slowly to capture power from vehicle regenerative braking

2 MW VRLA battery for voltage boost and peak shaving, in operation since Jan. 2009 (Sacramento)

Battery Energy Storage

- Lithium Ion (Li-ion) Batteries
  - Most prevalent BESS battery technology at present (multiple chemistries)
  - High energy density relative to supercaps and other battery types
  - Battery “strings” are composed of individual cells connected in series to achieve desired output voltage; strings are combined in parallel to obtain the desired output current
  - Battery management system (BMS) is required to ensure all cells have equal State of Charge (SOC) during charging and discharging, to control cell operating temperature and provide safety monitoring
  - Storage capacity/lifetime is dependent on cell temperature, depth of discharge and charging rate (repeated deep discharging shortens battery life)
  - Some chemistries can catch fire and release explosive vapors under certain failure scenarios

Battery Energy Storage

- Nickel Metal Hydride Batteries (NiMH)
  - Used in many US hybrid electric cars and portable tools
  - Used by Kawasaki Heavy Industries for their “GIGACELL” WESS
  - High energy density, but less than Li-ion
  - Longer cycle lifetime than Li-ion, similar cost as Li-ion (originally…)
  - High self-discharge rate (loses 5% to 20% of capacity within 24 hrs. after full charge)
  - Overcharging can damage cells (battery monitoring system required)
  - Tolerates deep discharge
  - Recommended operating temperature range is 0 to 40 Deg. C.
  - Environmentally benign

Battery Energy Storage

- Visual Comparison of Battery and Capacitor Energy Storage Capabilities (Energy Storage in Units of Joules)

Electrolytic capacitor		Supercapacitor	Li-ion battery	Gas lighter
98 mF/63 V $W = 194$ J	390 µF/450 V $W = 39.4$ J	310 F/2.7 V $W = 1{,}129$ J	1050 Ah/2.7 V $W = 14{,}040$ J	7 mL Butan $W = 205{,}800$ J

From Energy Storage by A. Rufer, CRC Press ©2018

Battery Energy Storage

- Visual Comparison of Battery, Capacitor and Flywheel Average Efficiency and Lifetimes

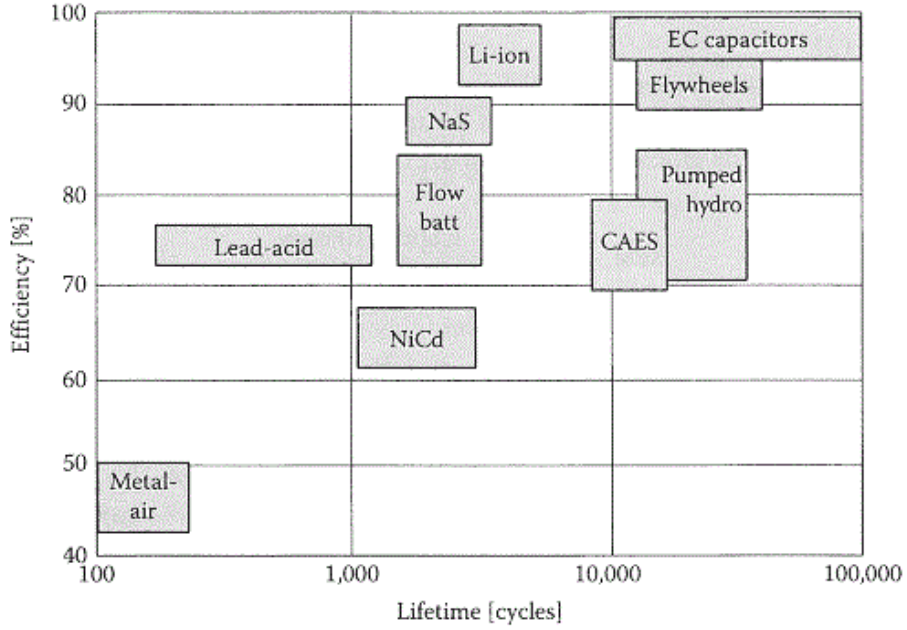

FIGURE 3.13 Efficiency and lifetime of different storage technologies.

From Energy Storage by A. Rufer, CRC Press ©2018

Reversible Substations

- Reversible substations allow traction power to flow in both directions
- Excess regenerated power can flow from the dc power system back to the utility, which is always a “receptive” load
- Requires “net metering” agreement with utility for sale of the regenerated power (similar to that required for a PV or wind turbine installation)
- This technology is becoming more common in European transit systems (European Union recognition as a greenhouse gas reduction technology)
- Major manufacturers at present:
  - Alstom
  - Secheron
  - Siemens
  - ABB

Reversible Substations

- Alstom HESOP
  - Simplified schematic diagram below
  - Thyristor-controlled rectifier (TCR) in parallel with IGBT inverter
  - The TCR operates when in traction (forward) mode, while inverter acts as a filter
  - Inverter operates in regeneration (reverse) mode, conducting regenerated power to the ac side
  - Inverter has lower power rating than the TCR, since reverse power is less than forward power

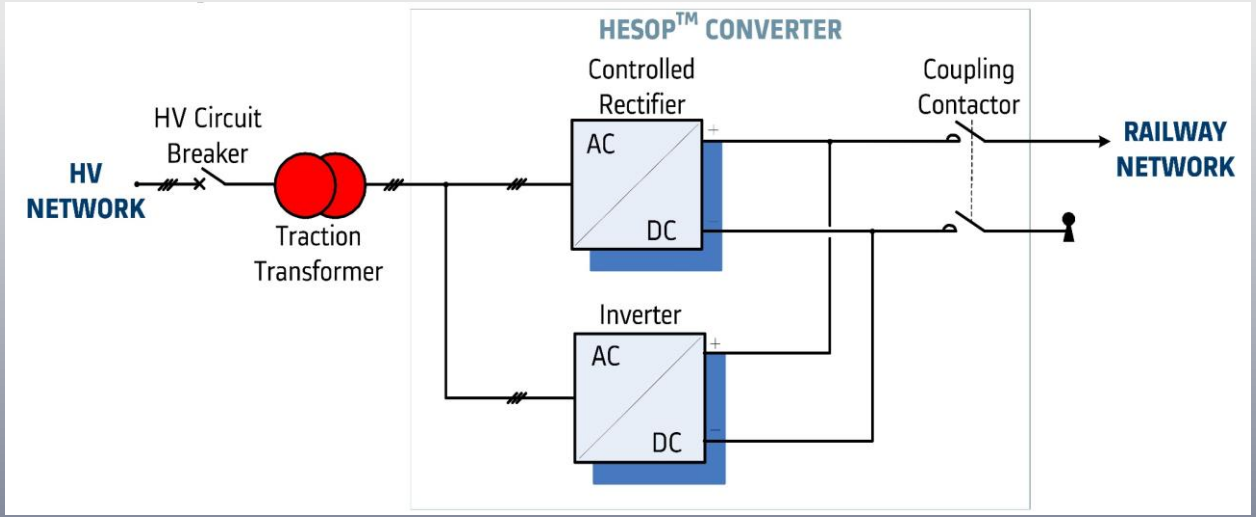

Reversible Substations

- Alstom HESOP
  - 130 units delivered to date in ten cities
  - Metros in Milan, Hamburg, Riyadh, London, Toulouse, Dubai and Panama
  - Tramways/light rail in Paris, Sydney and Milan
  - 600 Vdc, 750 Vdc and 1500 Vdc versions

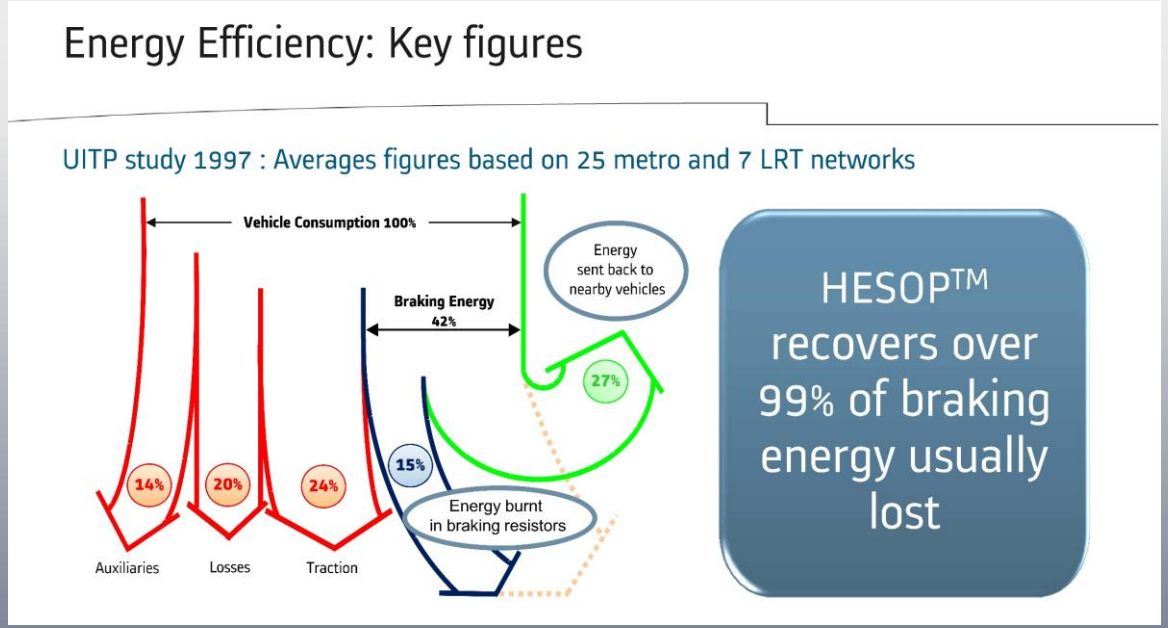

Reversible Substations

- Secheron
  - Offers product comparable to Alstom HESOP (TCR + IGBT inverter)

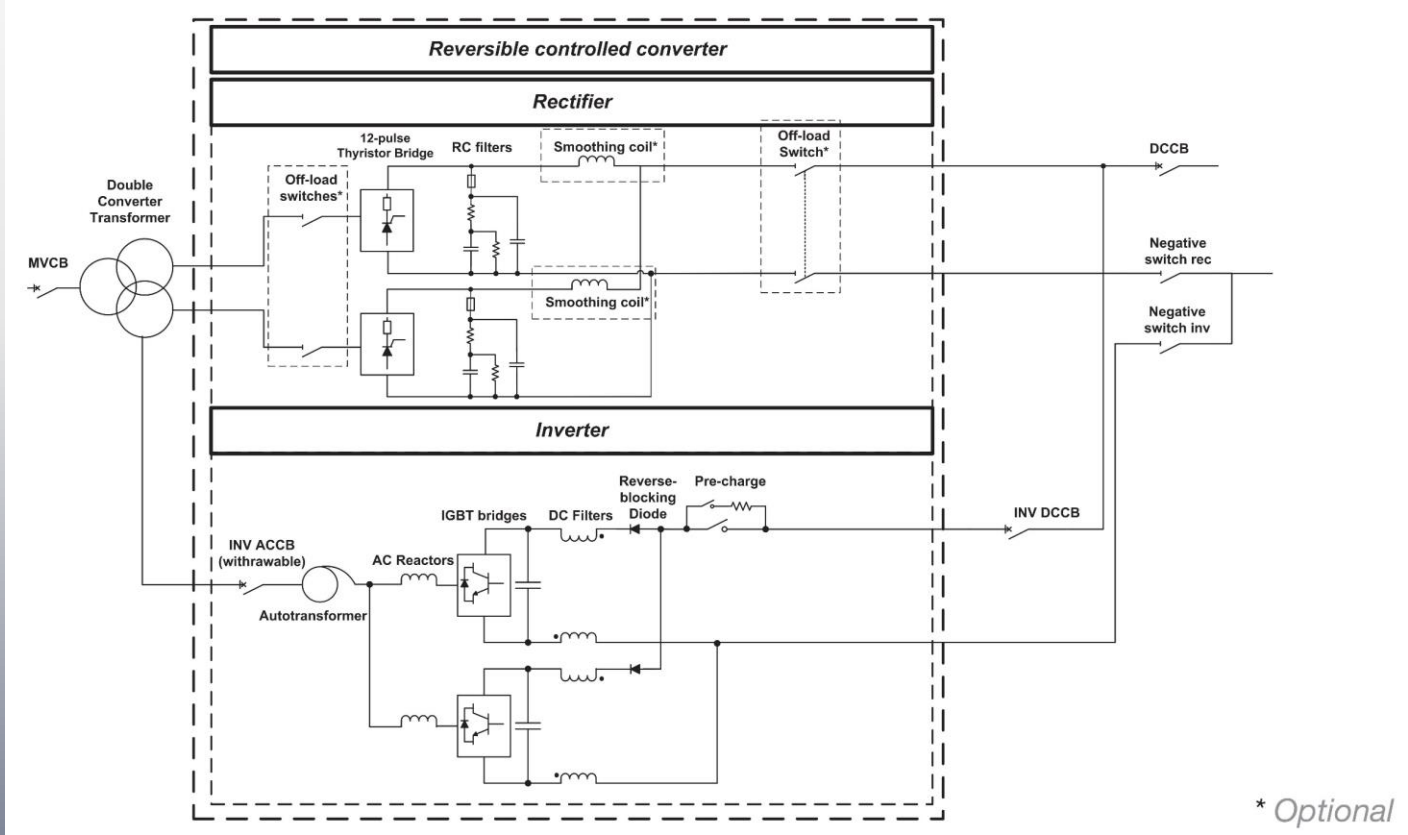

Reversible Substations

- Secheron, cont.
  - Ratings chart
  - Note the ≈ unity power factor for the inverter(reverse) mode
  - Inverter rating is 25% of rectifier rating (typ.)

REVERSIBLE CONTROLLED CONVERTER RANGE

	750 V		1500 V	
	Rectifier	Inverter	Rectifier	Inverter
Standard reversible controlled converter range				
Rated DC voltage [V]	750		1500	
Rated power [kW]	2000	500	4000	1000
Reference DC voltage [V] *	750	825	1500	1600
Voltage setting range [V] *	716-775	760-850	1450-1530	1550-1640
AC frequency [Hz]	50/60			
Overload duty	Up to Class VII	Class VI	Up to Class VII	Class VI
Efficiency	> 98 %	> 94 %	> 98 %	> 94 %
Power factor	> 0.9	≈ 1	> 0.9	≈ 1
Type of control	Phase control	PWM	Phase control	PWM
Type of cooling	Natural air	Forced air	Natural air	Forced air
IP degree	IP31			
Max. ambient temperature [°C]	40 (without derating)			
Noise level [dB]	58 @ 1 m	65 @ 1 m	58 @ 1 m	65 @ 1 m
Insulation levels	Tested for Cat 3 Power Frequency Withstand Voltage Levels according to IEC 61992-1 (other insulation levels upon request)			
Applicable standards	IEC 61000, EN 50328, IEEE 519, EN 50121-5, IEC 61992-1			

** Other ratings upon request, according to the needs of the customer project.*

Reversible Substations

- Secheron, cont.
  - Secheron also makes a separate inverter that can be retrofitted to existing diode rectifiers
  - Reversible rectifiers currently being installed in the Melbourne Metro tunnel (3 substations)

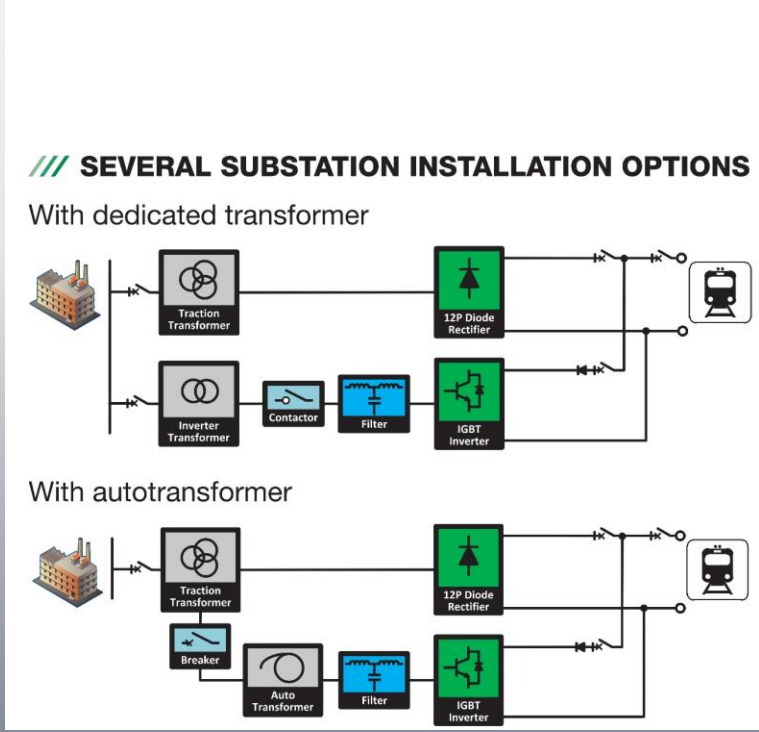

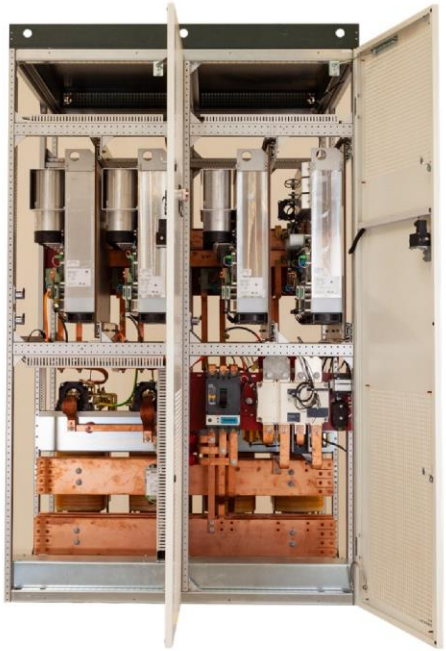

Reversible Substations

- Siemens Sitras TCI & PCI
  - IGBT inverters added to diode or thyristor rectifiers, available for 750 Vdc and 1500 Vdc systems
  - PCI introduced to market in 2016, operating in Germany, Austria, India and Riyadh (Saudi Arabia)

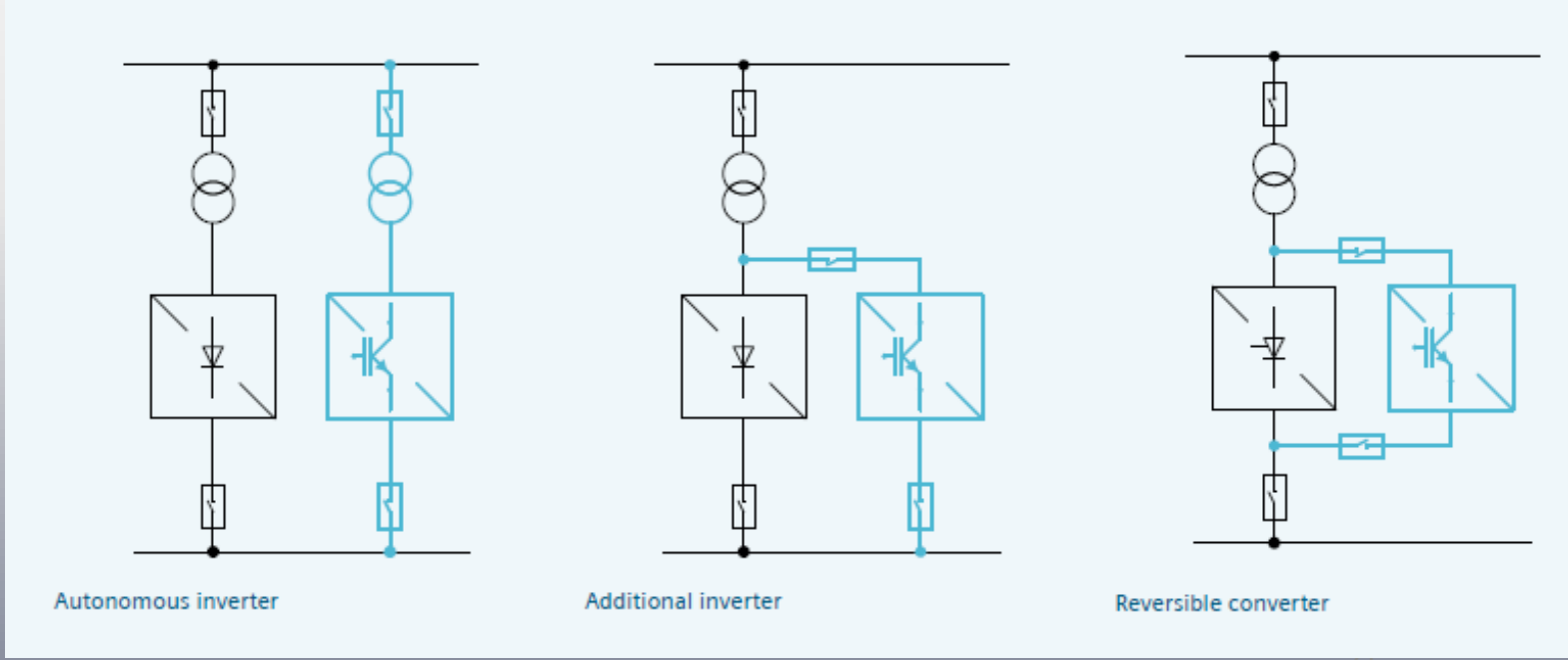

Reversible Substations

- ABB Enviline ERS
  - IGBT inverters added to diode rectifiers, available for 750 Vdc and 1500 Vdc systems
  - 2014 pilot installation in Poland, systems operating at Montreal Metro, Istanbul Metro, Warsaw tram, WMATA, France

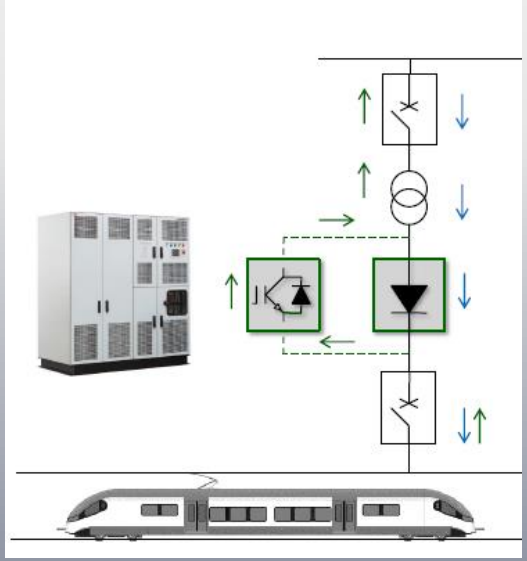

Technical data	Enviline ERS 750	Enviline ERS 1500
Nominal TPS (Traction Power Supply)	600 / 750 V_{DC}	1500 V_{DC}
Converter power range	0.5 to 1 MW	1 to 2 MW
Overload capability	up to 225%	up to 225%
Operating voltage range	500 to 1000 V_{DC}	1000 to 2000 V_{DC}
Efficiency	97.5 %	97.5 %
Cabinet dimensions (W x H x D)	2.0 x 2.2 x 1.0 m (width depends on configuration)	2.2 x 2.2 x 1.4 m (width depends on configuration)
Maximum system dimension	3.0 x 2.2 x 1.0 m	3.4 x 2.2 x 1.4 m
Weight	2000 kg (basic configuration)	2750 kg (basic configuration)
Storage temperature	−20° to 60°C	−20° to 60°C
Operating temperature	0° to 40°C, no derating	0° to 40°C, no derating
Maximum temperature (with derating)	50°C	50°C
Elevation	1000 m	1000 m
Enclosure	P21 / IP32 (option)	P21 / IP32 (option)
Remote access	CAN / IEC61850 / MODBUS TCP/IP	CAN / IEC61850 / MODBUS TCP/IP
SCADA output	6 input contacts, 6 output contacts (basic)	6 input contacts, 6 output contacts (basic)
THD at nominal power	<5%	<5%
EMC	EN 50121-5	EN 50121-5
Standards	EN 60146-1 / EN 50328	EN 60146-1 / EN 50328

Flywheel Energy Storage **Systems**

- Manufacturers for Transit System Applications - VYCON
  - Manufacturer since 2002 of mission critical backup power systems based on flywheel technology, located in Los Angeles, CA
  - REGEN product developed for the transit market
  - LA Metro installation at Westlake Substation, in operation since 2014
    - System rated 2 MW for 15 seconds, or 8.333 kWh
    - 16 flywheels in 4 cabinets, 125 kW each flywheel
    - Avg. daily savings of 1.5 MWh quoted in 2015 ASME Joint Rail Conf. paper
    - WESS cost savings estimated to be at least $99,000 per year at TPSS, 52% from energy savings and 48% from peak demand savings
    - 20 year expected lifetime for flywheels
    - Project funded by FTA grant

Flywheel Energy Storage Systems

- VYCON WESS at LA Metro

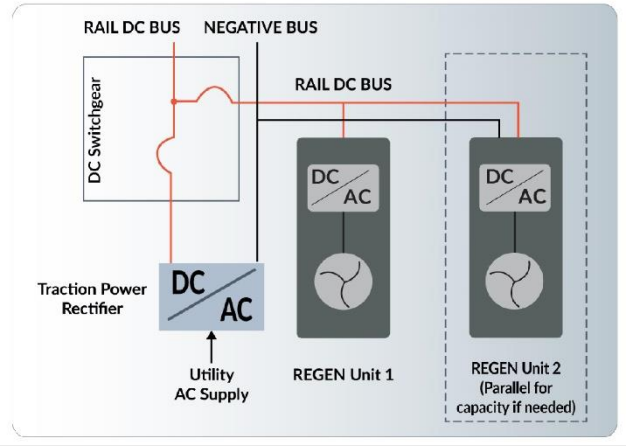

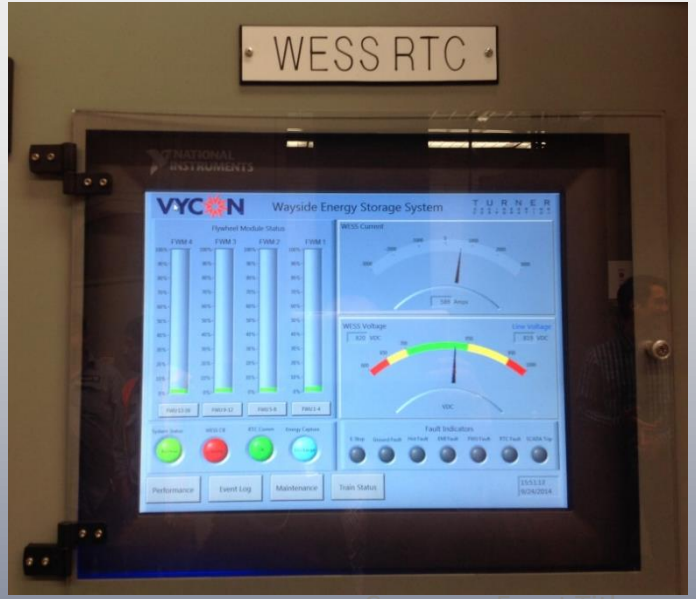

Flywheel Energy Storage Systems

- Manufacturers for Transit System Applications – Stornetic
  - Founded 2013 as a spin-off of ETC, a manufacturer of high-speed gas centrifuges for > 50 years
  - Based in Germany, manufactures modular systems solutions primarily for grid scale energy storage
  - Has made several attempts to get involved in transit system applications in the USA, but no projects have been booked to date

Design Concept	
Single flywheel machine EnWheel® 130 with DC Drive	

Lifespan	
Mechanics	20 years + (expected)
Charge cycles	100,000 +
Power Electronics	±10 years replacement

Operational Capacity	
Name plate power	130 kW
Effective energy	2.7 kWh
Bi-directional capacity @ 130kW	23 sec
One-directional capacity	40 sec

Electrical Data	
Input/output voltage	700 to 800 V DC
Maximum voltage	850V DC
Maximum effective power	170 kW peak
Round trip efficiency (typical)	90 %
Response time	10 ms

Flywheel Energy Storage Systems

- Manufacturers for Transit System Applications – Stornetic

Stornetic's Product Portfolio

	EnWheel®	DuraStor® Basic	DuraStor® System
Description	Flywheel plus drive and vacuum for integration into storage systems	Storage container including EnWheels, mounting, EnWheel® Management System, and primary cooling	DuraStor® Basic plus grid interface, active cooling and Application Management System
Power [kWp]	22 to 83	Scalable from 120 to 1200	
Capacity [kWh]	3.4	15 to 100	
Round Trip Efficiency [≤%]	90	90	85

10.05.2018 • 10 © 2018 STORNETIC GmbH STORNETIC

Flywheel Energy Storage Systems

- Stornetic, cont.

DuraStor 120 to 300 – Turn Key Solution for Microgrids

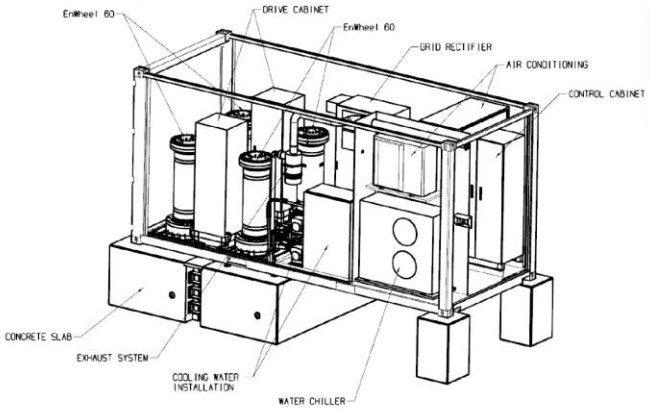

Technical Data	DuraStor®
Peak Power	120 to 340 kW
Rated Power	120 to 300 kW
Capacity	7 to 14 kWh
Flywheels	2 or 4 EnWheel® 60

STORNETIC

Flywheel Energy Storage Systems

- Stornetic, cont.

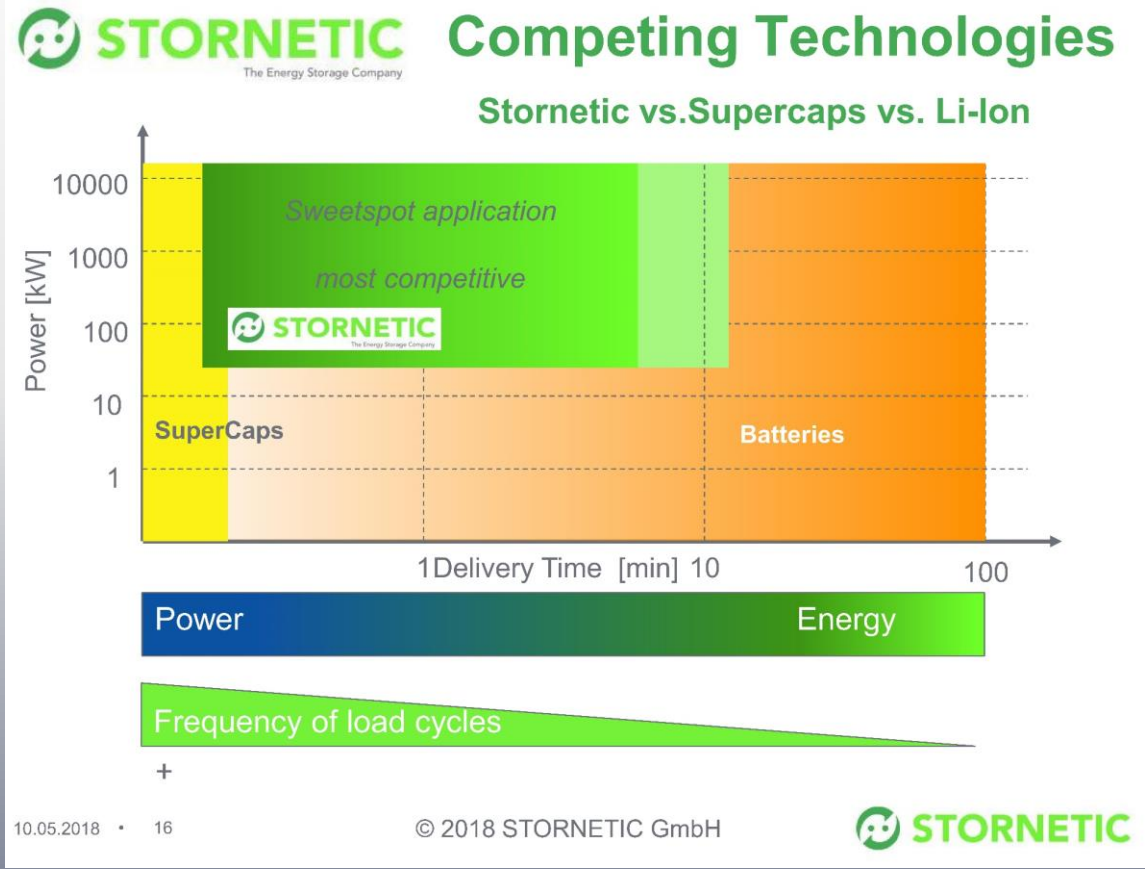

Flywheel Energy Storage Systems

- Manufacturers for Transit System Applications – Beacon Power
  - Manufacturer of grid-scale backup power systems based on flywheel technology, located in Tyngsboro, MA
  - Operating 20 MW plants in Stephentown NY (2011) and Hazle, PA (2013)
  - Currently developing a 1 MW ESS for New York City Transit #7 Line
    - System rated 1 MW for 5 minutes, or 83.5 kWh
    - 20 year or 175,000 full charge/discharge cycle design life
    - Six 167 kW kW flywheels buried in the earth
    - Flywheels are 7 ft tall, 3 ft diameter with 2,500 lb rotor mass
    - Project partially funded by New York State Energy Research & Development Authority (NYSERDA) grant

Flywheel Energy Storage Systems

- Beacon Power, cont.

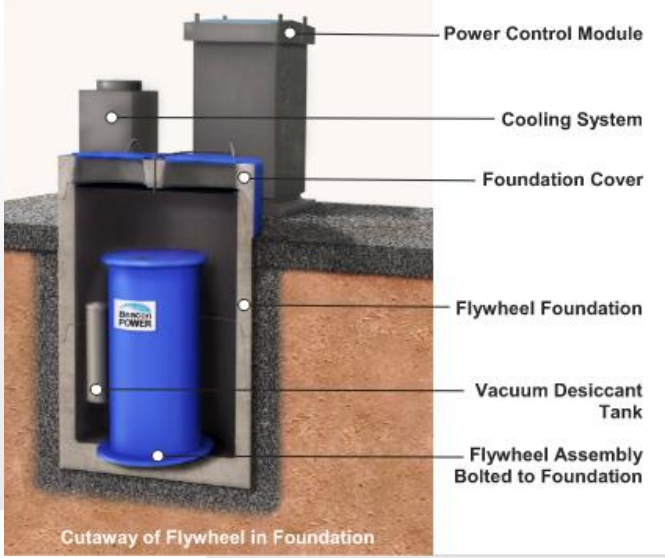

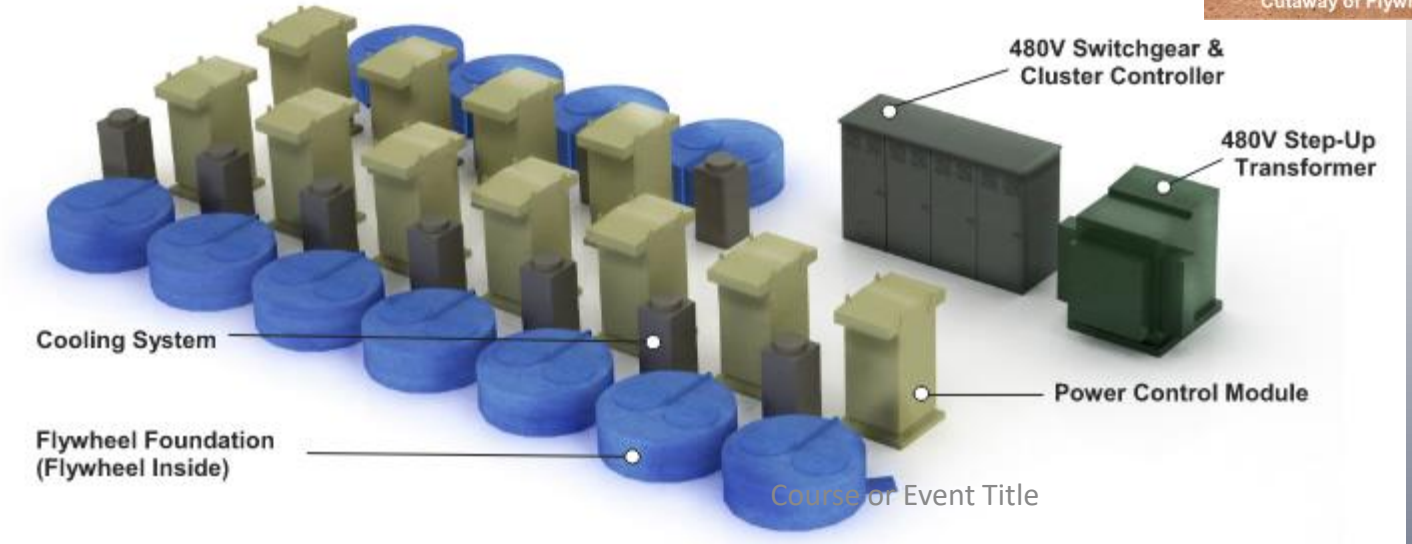

Supercapacitor Energy Storage Systems

- Manufacturers for Transit System Applications
  - ABB Enviline ESS
  - Siemens no longer offers the Sitras SES

Technical data	Enviline ESS 750	Enviline ESS 1500
Nominal voltage	750 VDC	1500 VDC
Rated system voltage	900 VDC	1800 VDC
Rated system power	1.35 / 2.7 MW	2.6 / 5.2 MW
Rated system current	1800 / 3600 ADC	1740 / 3480 ADC
Converter width	2000 / 3000 mm	2200 / 3200 mm
Converter depth	1600 mm	1600 mm
Converter height	2300 mm	2300 mm
Converter weight	2500 / 4000 kg	2700 / 4400 kg
Duty cycle class	I-X / IEC 62924:2017*	I-X / IEC 62924:2017*
Earthing	acc. to IEC 61992-7-1 / IEEE 1653.6	acc. to IEC 61992-7-1 / IEEE 1653.6
Installation	Indoor / Container	Indoor / Container
Operating temperature	up to 40°C*	up to 40°C*
Degree of protection	NEMA 2 / IP 21*	NEMA 2 / IP 21*
Remote access	TCP/IP / RS485 (Modbus) / DNP 3*	TCP/IP / RS485 (Modbus) / DNP 3*
SCADA output	4 contacts*	4 contacts*
Standards and tests	IEC 62924:2017	IEC 62924:2017
Energy Storage (EDLC)		
Rated energy up to	25.3 kWh / 91.2 MJ	33.8 kWh / 121.6 MJ
Rated energy per panel	2.1 kWh / 7.6 MJ	2.1 kWh / 7.6 MJ
Panel dimension (WxDxH)	600x1600x2300 mm	600x1600x2300 mm
Panel weight	1100 kg	1100 kg
Energy Storage (Li-ion battery)**		
Rated energy	100 kWh – 2500 kWh	100 kWh – 2500 kWh

* other on request, ** project specific

Supercapacitor Energy Storage Systems

- ABB, cont.
  - Enviline Supercap ESS at Baltimore Metro West Cold Spring Substation (2018 startup)
  - Two 6 MJ capacitor banks, 1 converter rated for 1000 amps for 20 seconds
  - Dedicated 750 V dc circuit breaker, dc-dc converter section
  - Part of larger energy conservation project financed by Constellation New Energy
  - 800 kWh saved per day, avg.
    - Avail. space limits capacity

Supercapacitor Energy Storage Systems

- ABB, cont.
  - Enviline ESS at SEPTA Griscom Substation, 2014
  - Two 6 MJ supercap cabinets (1.7 kWh x 2)
  - Max. current output: 1000 A for 8 secs. at 750 Vdc, each cabinet
  - Current output limited only by dc-dc converter (1000 A per converter)
  - Dimensions: 600mm W x 2100mm H x 1600mm D
  - 700 kWh saved per day, avg. (location not ideal)
  - Funded by FTA (TIGGER Grant) plus 20% state share

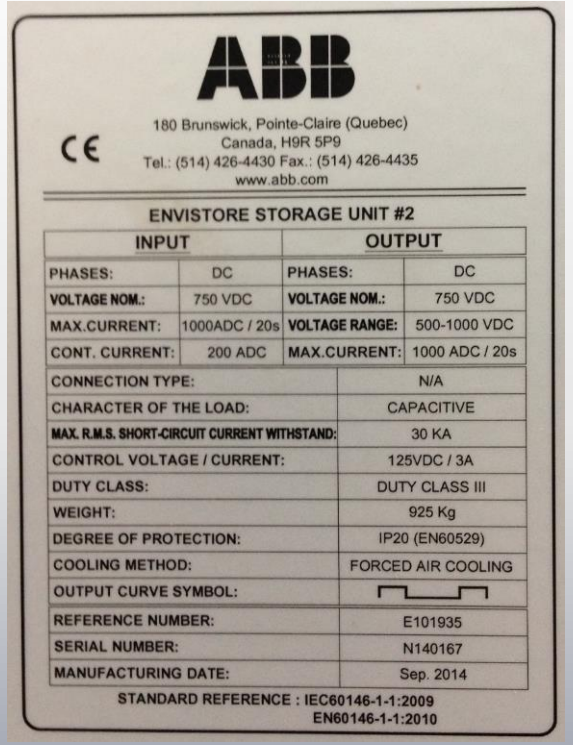

ABB

180 Brunswick, Pointe-Claire (Quebec)
Canada, H9R 5P9
Tel.: (514) 426-4430 Fax.: (514) 426-4435
www.abb.com

CE

ENVISTORE STORAGE UNIT #2

INPUT		OUTPUT	
PHASES:	DC	PHASES:	DC
VOLTAGE NOM.:	750 VDC	VOLTAGE NOM.:	750 VDC
MAX.CURRENT:	1000ADC / 20s	VOLTAGE RANGE:	500-1000 VDC
CONT. CURRENT:	200 ADC	MAX.CURRENT:	1000 ADC / 20s

CONNECTION TYPE:	N/A
CHARACTER OF THE LOAD:	CAPACITIVE
MAX. R.M.S. SHORT-CIRCUIT CURRENT WITHSTAND:	30 KA
CONTROL VOLTAGE / CURRENT:	125VDC / 3A
DUTY CLASS:	DUTY CLASS III
WEIGHT:	925 Kg
DEGREE OF PROTECTION:	IP20 (EN60529)
COOLING METHOD:	FORCED AIR COOLING
OUTPUT CURVE SYMBOL:	
REFERENCE NUMBER:	E101935
SERIAL NUMBER:	N140167
MANUFACTURING DATE:	Sep. 2014

STANDARD REFERENCE : IEC60146-1-1:2009
EN60146-1-1:2010

Storage Unit Nameplate

Battery Energy Storage Systems

- Kawasaki Heavy Industries NiMH "Gigacell"
  - "Battery Power System" (BPS) at NYCTA Far Rockaway test track
    - Demonstration project for research purposes, funded by state grant (NYSERDA)
    - BPS installed at a tie breaker substation, 1.5 miles from substations on either side
    - Gigacell product does not use a dc-dc converter
    - Testing proved 17 ten-car trains could be moved to the next station during an emergency power condition
    - Final report available (October 2010)

Table 3-1 Battery Specification

Battery Voltage:	670 V
Battery Capacity:	600 Ah
Energy Capacity:	402 kWh
Parallel Number of Battery Unit:	4 Units
Series Number of Battery Module:	16+1/3* Modules
Internal Resistance:	25 mΩ

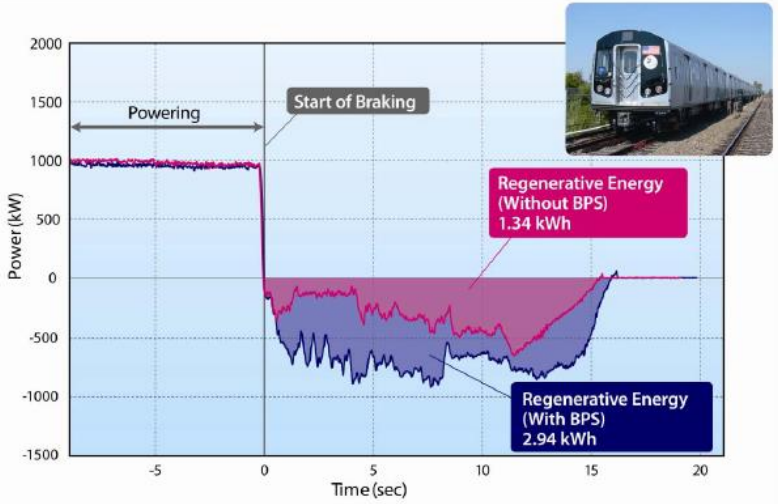

Fig. 6-5 Comparison of Regenerative Energy (Without BPS vs. With BPS)

Battery Energy Storage Systems

- Kawasaki, cont.
  - Gigacell BPS in WMATA West Falls Church Substation (Metro Orange Line)
    - Demonstration project for research purposes, partially funded by FTA grant
    - 2 MW, 378 kWh system rating
    - 18.63, 36 V NiMH battery modules in series, thirty 1.2 V cells per module
    - System was tested with and without the West Falls Church Substation rectifiers in service, and results proved that *BPS performance is greatly improved when it is not operating in parallel with a substation* (not co-located with a substation)
      - 7.2% energy savings when co-located vs. 15.5 % when not co-located
      - 121 kW peak demand reduction when co-located vs. 436 kW when not
      - 42 V vs. 139 V line voltage improvement
    - Final report available (June 2015)
  - 5 Gigacell BPS installed in Japan

Battery Energy Storage Systems

- ABB Enviline Li-ion WESS
  - Demonstration/pilot WESS project at SEPTA Commissioned in March 2012
  - Installed inside existing Letterly Substation on the Market Frankford Metro Line
  - Assisted by $900,000 grant from Pennsylvania Energy Development Authority
  - 420 kWh, 800 kW Synarion 24P Li-ion battery from Saft (containerized)
  - Multiple 750 kW dc-dc converters with power control system interfaces with substation 630 Vdc substation bus

SEPTA Li-ion WESS Inside Letterly Substation

- Recording of SEPTA train regenerative braking energy storage event at Letterly WESS (≈20 sec. long)
- Red data line: Amperes flowing into the Li-ion battery from braking rail vehicle (6-car train)
- Blue data line: Letterly substation dc bus voltage
- Available regen braking energy is constrained by age of existing SEPTA substations and rolling stock

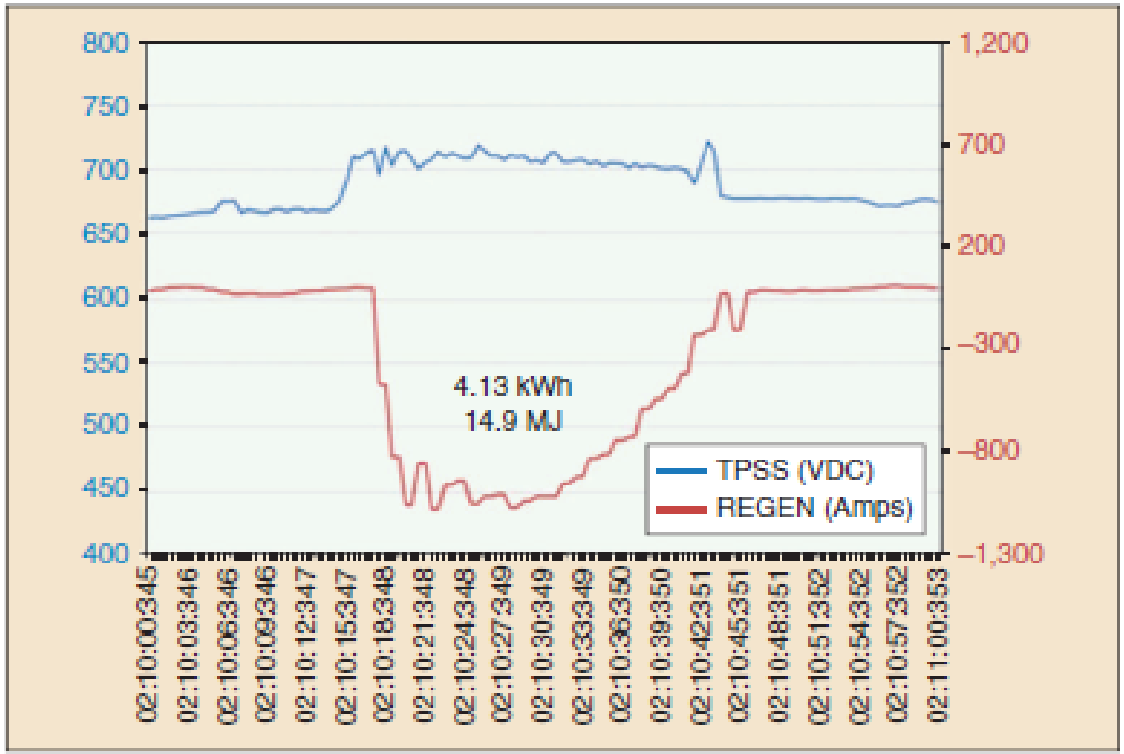

FIGURE 10 The TPSS and regenerative current during a 20-s regen event.

Battery Energy Storage Systems

- WESS in USA to date have relied primarily on energy/demand savings and train voltage support for justification
- SEPTA now has 9 operating Li-ion battery-based WESS that access the wholesale electricity market ("grid") for additional revenue
  - Frequency regulation (FR) (ancillary services)
  - Economic demand response
- PJM Interconnection is the Regional Transmission Organization (RTO) serving SEPTA
- SEPTA uses market services provider Viridity, a PJM member, to "bid" the batteries into the PJM market
- Participation/performance requirements are strict: battery response & performance are monitored and "graded"
- Revenue is based on average regulation market clearing price (RMCP)

Figure 11: Synerion Battery Module

Battery Energy Storage Systems

- ABB Enviline Li-ion Grid-Enabled WESS at SEPTA Letterly Substation
  - 800 kW of capacity controlled by PJM Interconnection (Regional Transmission Org.)
  - Monthly payments to SEPTA for participating in RTO system frequency regulation market
  - Uses high power density Li-ion battery from Saft Battery
  - Commissioned in March 2012
  - $1k in FR revenue in 2015
  - Letterly 2015 retail energy savings: $28k (at 8.4¢/kWh)
  - Retail energy savings constrained by the need to keep FR market performance scores competitive (keeping battery at high SOC)

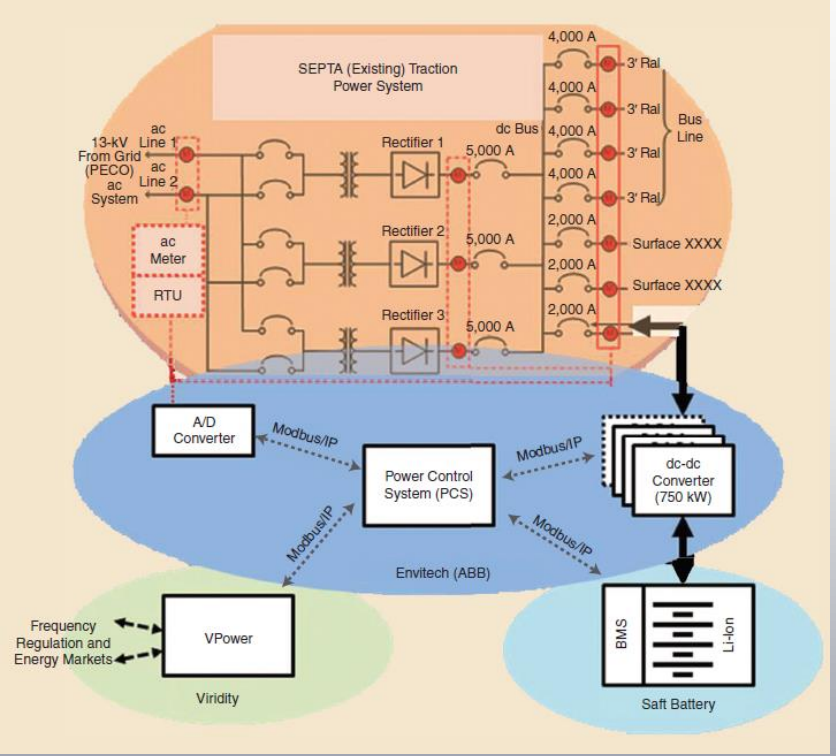

Battery Energy Storage Systems

- SEPTA Grid-Enabled WESS in Griscom Substation
  - Located at end of Market-Frankford metro line
  - Used 580 kWh medium power density Saft Li-ion battery bank plus two 6 MJ supercapacitor units (hybrid WESS)
  - Hybrid system improves energy capture while also providing consistent frequency regulation market participation
  - Supercapacitors do not have the energy density needed for grid services (FR and demand reduction)
  - Commissioned in January 2015
  - Generated $145k in FR revenue and $16k energy savings in 2015 (at 8.4¢/kWh)
  - Won the 2016 PA Governor's Award for Environmental Excellence
  - Battery aged prematurely, was replaced by mfgr.

Battery Energy Storage Systems

- ABB/SEPTA WESS Expansion Program
  - Seven additional grid-connected Li-ion WESS installations were added through 2017 (8.75 MW added to exist. 1.8 MW)
  - FDBOM type project, WESS owner/operator/financier was Constellation New Energy (similar to an ESCO project)
  - Research and testing planned to determine how to best utilize the WESS to support limited train operations during a utility power outage

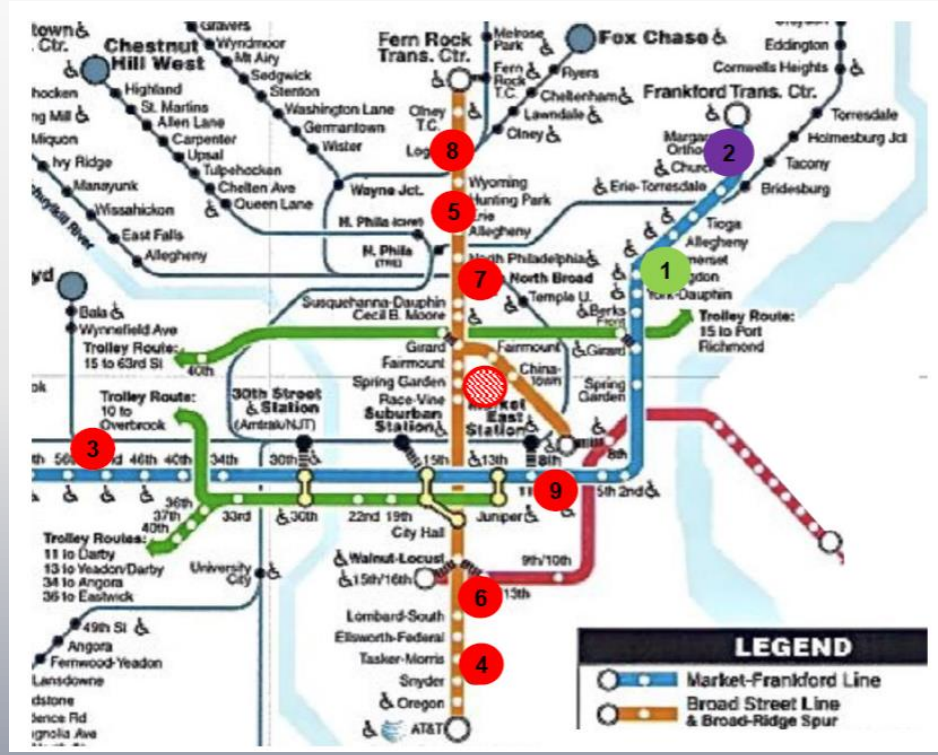

Battery Energy Storage Systems

- ABB/SEPTA WESS Expansion Program
  - The first of the seven new WESS units was commissioned in February 2017 in Allison Substation, providing 1 MW of frequency regulation capacity
  - Note new “distributed” Li-ion battery system design (Saft America)

Battery Energy Storage Systems

- Traction Power System Peak Demand Reduction ("Behind the meter")
  - Reduces utility peak demand charges by installing BESS at strategic locations
  - Becoming a major services market in Ontario, Canada due to recent changes in provincial electricity regulations that have significantly increased electricity costs
    - Particularly customers with peak demand above 0.5 MW such as rail transit systems
  - Uses comms network and specialized software to predict and reduce single facility or system peak demand
  - When project peak is approaching, batteries discharge to offset power purchased from utility
  - Batteries are charged during least cost periods, discharged during highest cost periods
  - Energy service companies offer turnkey solutions

Battery Energy Storage Systems

- Traction Power System Peak Demand Reduction ("Behind the meter")

NRSTOR C&I

Vision and Value Proposition

- NRStor C&I will act as the energy storage project developer and operator
- Commissioning MW-scale battery storage projects for behind-the-meter commercial and industrial customer sites in Ontario
- Focus on reducing customer's overall electricity cost without impacting their carbon footprint
- Value drivers for the customer are:

  1) Taking advantage of electricity price arbitrage;
  2) Participating in demand response programs;
  3) Peak shaving; and
  4) Reducing/eliminating Global Adjustment charge

NRStor C&I provides a risk-free behind-the-meter energy storage solutions for Ontario's C&I customers with an objective of eliminating their Global Adjustment charges

Battery Energy Storage Systems

- Traction Power System Peak Demand Reduction ("Behind the meter")

NRSTOR C&I

Battery Operations

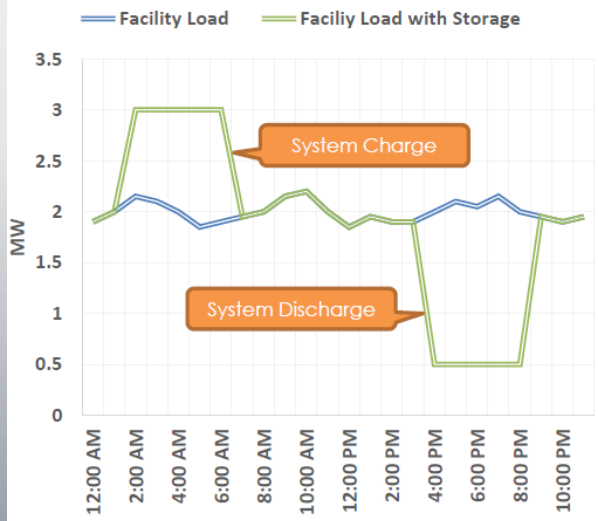

- Peak Shaving – utilize battery storage to reduce electricity load during the 5 CPs to reduce/eliminate Class A Global Adjustment charges
- Electricity Price Arbitrage – discharge battery during high HOEP and charge during low HOEP
- Demand Response – participate in provincial demand response auctions to extract an additional revenue stream without disrupting operations
- Reliability – battery storage can reduce power variability
- Environmental Benefits – reduce GHG emissions from on peak power generation

Charge during off-peak hours and discharge during peak hours

IEEE

Broad Review of Technology Options

- WESS Design Guides & Standards
  - IEEE 1887-2017, *Guide for Wayside Energy Storage Systems for DC Traction Applications*
  - EN/IEC 62924-2017, *Railway applications - Fixed installations - Stationary energy storage system for DC traction systems*
  - NFPA 1, *Fire Code*, Chapter 52, Energy Storage Systems
  - NFPA 855-2020, *Standard for the Installation of Stationary Energy Storage Systems*
    - 10 ft clearance required to lot lines unless fire barriers are provided, or ESS enclosure has 2-hr rated walls
    - 10 ft clearance required to buildings unless fire barriers are provided, or buildings have 2-hr rated walls
    - Restrictions on usage in occupied buildings

Broad Review of Technology Options

- Discussion

Toronto Eglinton Crosstown LRT Maintenance Facility BESS