SOUTHEASTERN PENNSYLVANIA TRANSPORTATION AUTHORITY

230 kV LINE DIFFERENTIAL PROTECTION USING SEL-411L AND SEL-311L RELAYS

IEEE Vehicular Technology Society

Philadelphia Chapter

Brandon S. Swartley, P.E.

March 25, 2019

Presentation Topics

1. Introductions
2. Project Overview
3. Existing Protection Schemes
4. Site Photographs
5. Proposed Protection Schemes
6. Technical Presentation of SEL-311L and SEL-411L Relays

Main project objectives:

1. Existing 230 kV line protection schemes use obsolete equipment
   a) Westinghouse LCB II line differential relays with audio tone (primary)
   b) GE CEY line distance relays (backup)
      i. Audio tone transfer trip for distance scheme (normal line)
      ii. Power line carrier and transfer trip (backup line) – uses wave trap
2. Replace existing primary and backup line protection schemes
   a) SEL-411L line differential over fiber optic (primary)
   b) SEL-311L line differential over fiber optic (backup)

Existing Protection Schemes – 230 kV Single-Line Diagram

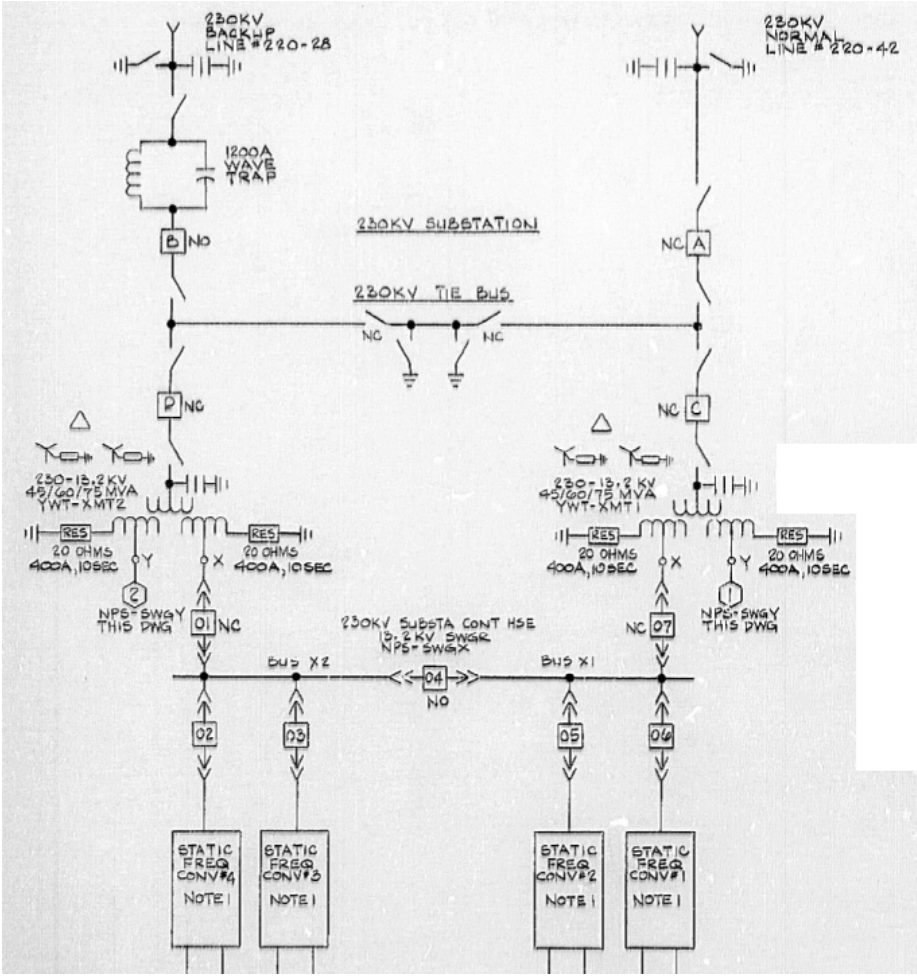

Existing Protection Schemes – Power Line Carrier Scheme

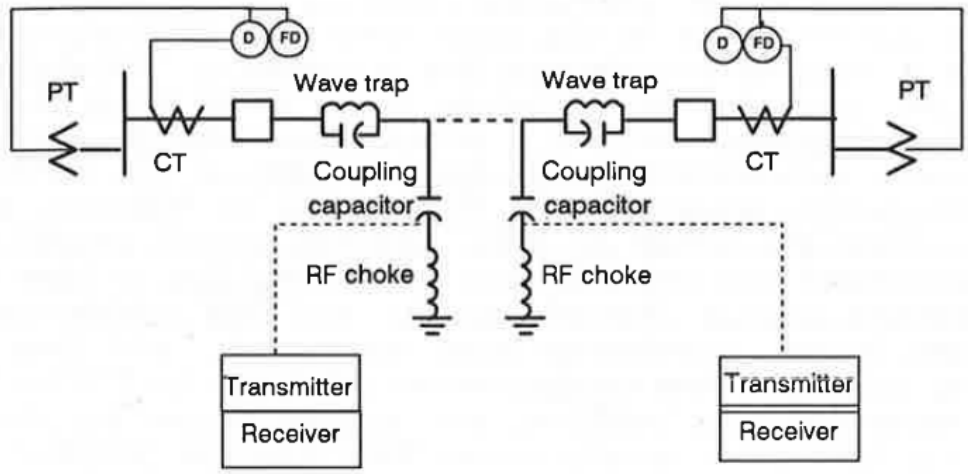

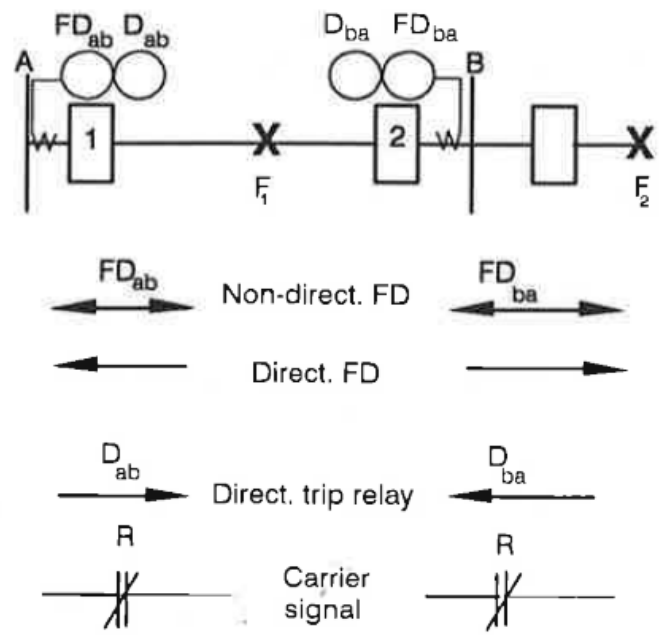

Fault detector (FD) starts carrier
Directional relay (D) stops carrier
Trip occurs if D operates and no carrier signal is received

Existing Protection Schemes – Pilot Wire Scheme

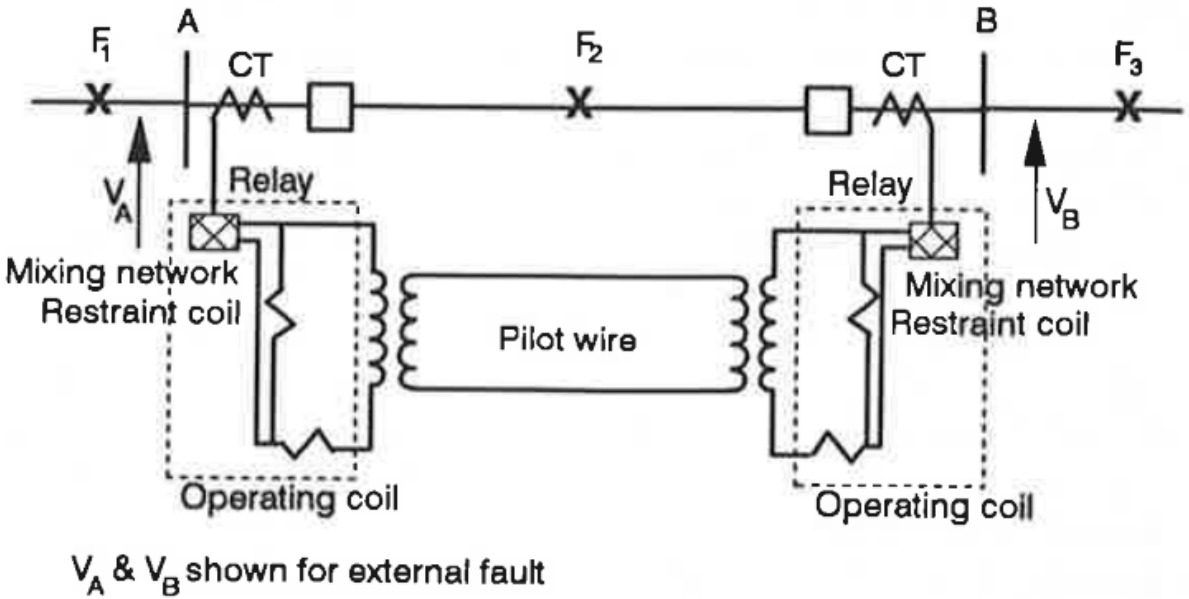

Existing Protection Schemes – Metering and Relaying Diagram

Line 220-28

Line 220-42

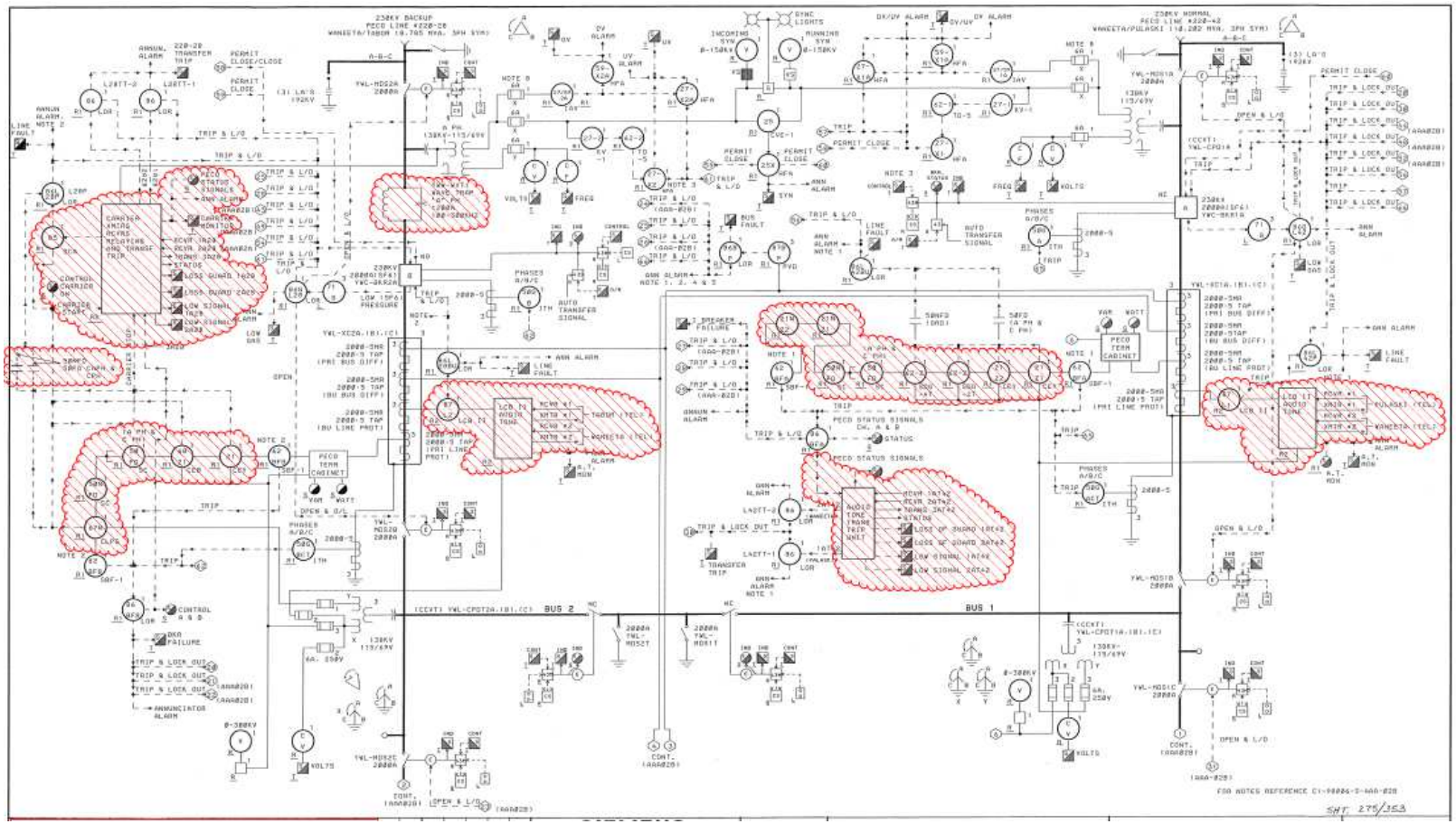

WJSFC

WJSFC

Existing Protection Schemes – Line 220-42

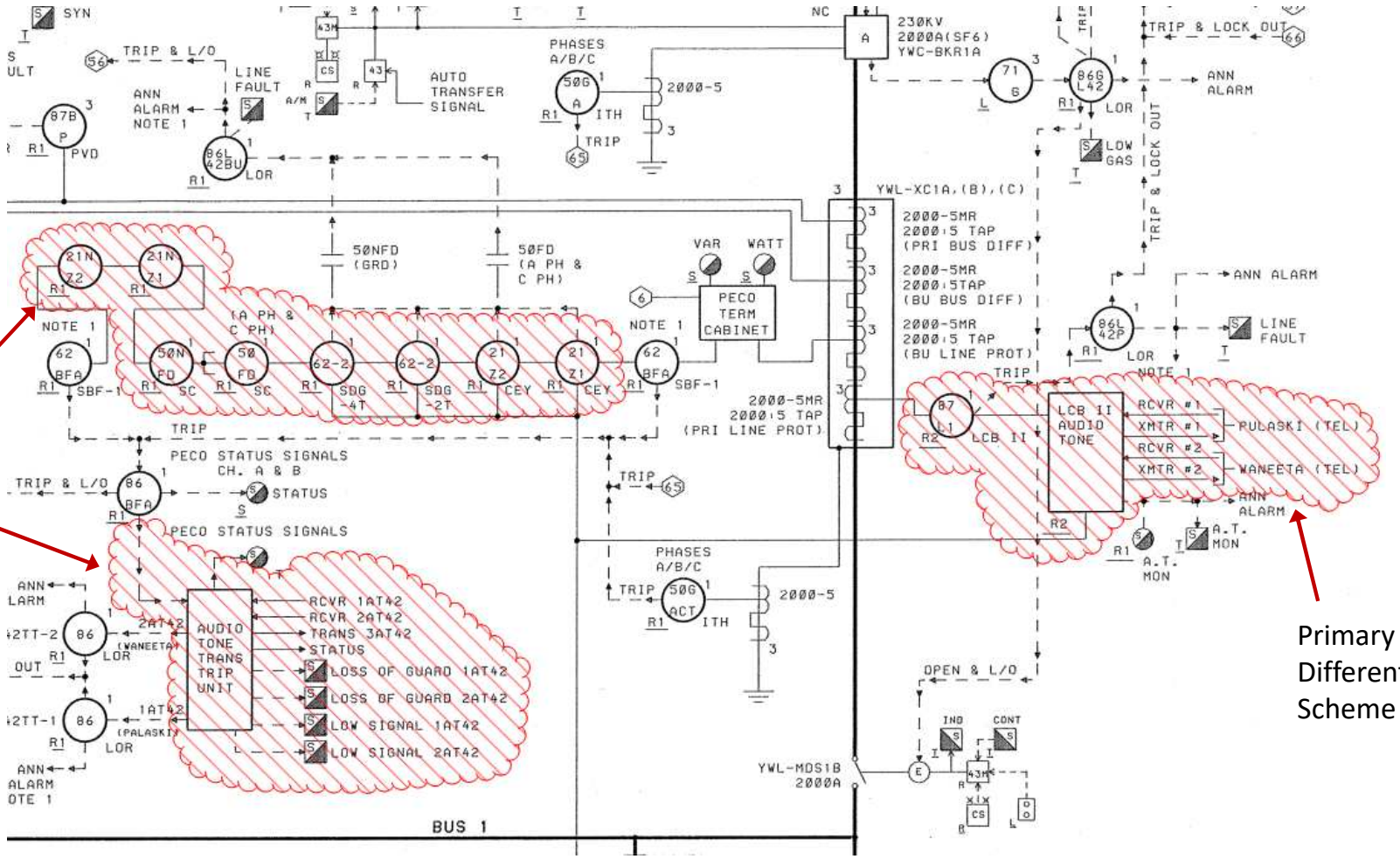

Backup Distance Protection Scheme

Primary Line Current Differential Protection Scheme

Existing Protection Schemes – Line 220-28

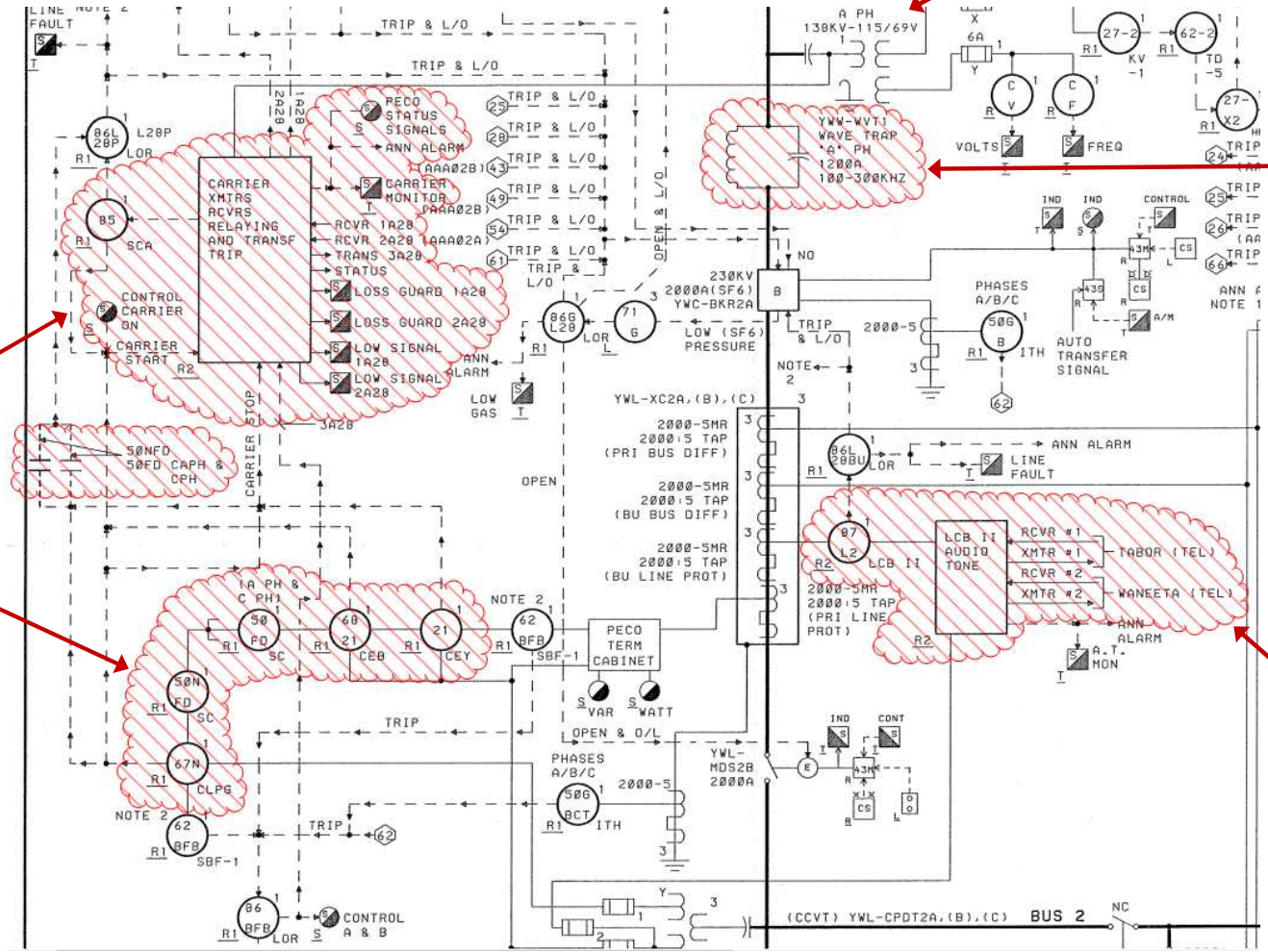

Photographs

Line 220-42
West LCB II

Line 220-42
GE Audio Tone

Wayne Junction 230 kV Line Protection

Line 220-28
GE Carrier

Line 220-28
West LCB II

Proposed Protection Schemes